PIONEER®

WORLD-FAMOUS BRAND IN HI-FI-REPRODUCTION

STEREOHEADPHONES

SE-2

In high fidelity reproduction—especially in the case of stereophonic reproduction—it is impossible to enjoy fully the sensation of being present at a rendition unless the sound volume reaches a certain magnitude. However where environmental conditions are such that the sound volume has to be restricted like at night, etc., stereo headphones have come into the limelight because not only their sound reproduction does not leak off to the outside but also they assure rich stereophonic sensations as well as excellent tone quality without being disturbed by surrounding noises.

The Pioneer has already placed on the market the headphones Model SE-1—a product with mechanisms entirely different from those of conventional so-called receivers—which have gained wide public approval and acclaim. Based on the experiences and techniques gained from them, the Company has just perfected another epoch-maker —Model **SE-2**—with plastic head spring (patent pending) and a unique junction box with improvements which permits simultaneous hearing of a speaker system and the headphones. With the headphones Model **SE-2** of high performance and color and design connected to your amplifier on hand, you can enjoy hi-fi music to your heart's content without getting obsessed by the idea that you might be annoying your neighbors or without being disturbed by external noises.

Specifications of Model SE-2

Model No.:	SE-2
Matching impedance:	8 - 16 ohms
Speaker impedance:	8 ohms for each channel
Allowable input:	0.5 watts
Cabtyre cord:	80 inch
Connecting terminals:	3-p jack (with plug at end)
Weight:	0.99 lbs

Performance of Model SE-2

1. Excellent for the reproduction of low and mid ranges.
2. Easy to hear because of tight fitting to ears and excellent signal noise ratio.
3. Rich in stereophonic sensation compared with ordinary speaker systems (binaural effect).
4. Possible to use independently with any high-power amplifier.
5. Possible to match to the 8 or 16-ohms output impedance of amplifier.

PIONEER ELECTRONIC CORPORATION

5 Otowacho 6-chome, Bunkyoku, Tokyo, Japan

PIONEER

WORLD-FAMOUS BRAND IN HI-FI REPRODUCTION

Mechanism of Model SE-2

1. Exquisite appearance

They are very exquisite and light. Colored almite -- aluminum oxide—used in the receiver units enhances its exquisite appearance and contributes to its light weight.

2. New attempt at head spring

The head spring—entirely novel attempt based on unique concept—is made from a combination of two kinds of plastic resins (polyacetal and polycarbonate) formed into practical springy material—a unique product of the Pioneer. Because of its mechanical structure and design utilizing the good properties of resins—excellent color, luster and agreeable touch inherent to resins—, the Model **SE-2** has fine qualities never before attained by conventional receivers.

3. Junction box with 3-step selector switch

Being held on hand or mounted to a wall or on a table for enjoying stereo music, the junction box can be easily switched, its frame being made of styrol moldings.

As a new attempt of junction box, it is provided with the 3-step selector switch so that simultaneous hearing of a speaker system and headphones can be performed in addition to the selection of the speaker system and the stereo headphones.

4. Headphone cable

As a 3-pole plug is attached at the end of 80 inch long cord, stereo music can be enjoyed simply by plugging it either into the jack on the junction box or into the jack of the amplifier.

Instructions for using Model SE-2

Connect two sets of parallel cords (the blue one is — while the white is +) of the junction box with the proper combination of polarities to the 8-ohm output terminals (R, L) of a stereo amplifier as shown in the illustration below. Then with the selector switch of the junction box at the "Headphone" setting, insert the plug of headphones into the phone "Jack". Attach the headphones to ears placing the one with the big vinyl cord to the left side.

When switching to a speaker system, connect the cords to the speaker terminals L (+, —) and R (+, —) of the junction box with the proper combination of polarities as before. In this case the wires connecting the junction box to the amplifier have to be connected to the terminals matching the impedance of the speaker system.

When using the speaker system and the headphones together, connect them to the 8-ohm terminals on the back of junction box with the proper set of polarities, and then insert the headphone plug into the "Jack" of the junction box. With the foregoing procedures completed, operate the selector switch and check its actions by repeating "Headphone←→Both←→Speaker" switching operations and then adjust the output of amplifier to a proper level. The switchings from the speaker system to the headphones, vice versa or both can be done freely and simply to suit the purpose.

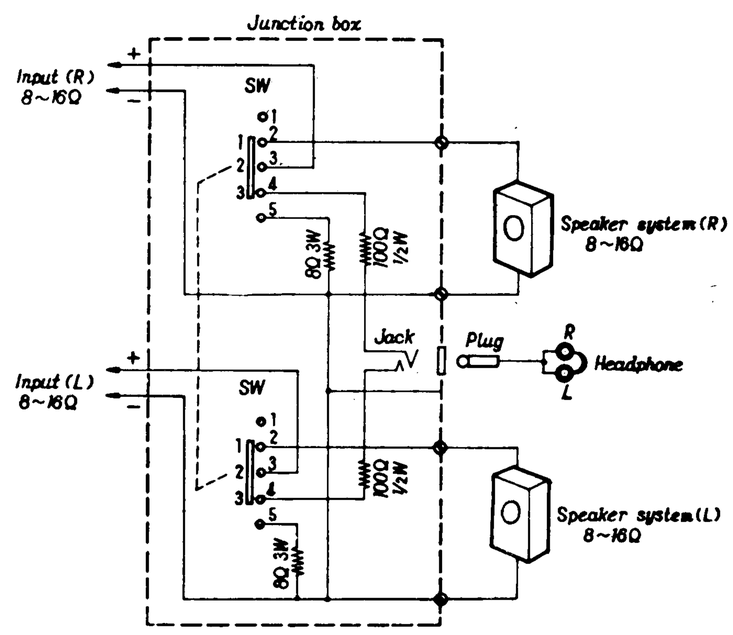

On the Amplifier used with SE-2

Since the output cord of **SE-2** is of three-terminal type, care should be exercised as it can not be used with any amplifier with a special ground connection such as the one wifh terminals for a center speaker.

SE-2 is designed to be connected, through three-terminal plug, directly to an amplifier provided with a jack for headphones. Furthermore in addition to the conventional two-way selection system—headphone←→speaker, **SE-2** has a junction box with three-way selector switch which permits the simultaneous use of both of them. For this reason **SE-2** can not be employed with those amplifiers, such as **SM-Q300**, **SM-Q300B**, etc. of the Pioneer series, with center-speaker terminals, VDF circuit, etc., which are provided with special ground connections. With such an amplifier, please use four-terminal type **SE-1** which has a junction box with two-way selector switch.

<KC-05F06>